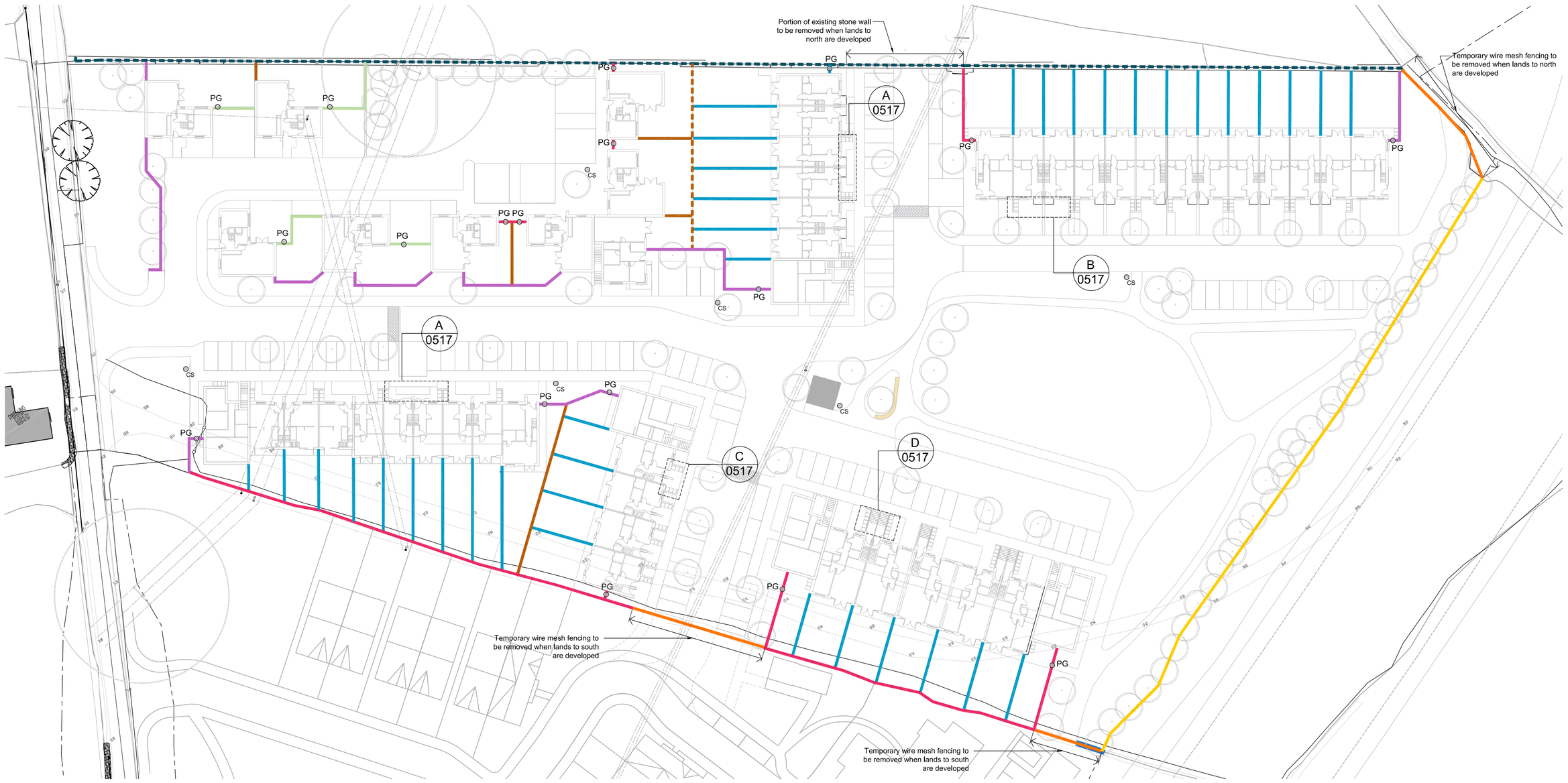

10 SITE PLAN - Boundary Tipes

Scale: 1:500 @ A1

Notes:

Do not scale from this drawing.
Use figured dimensions only.
All errors and omissions to be reported to the Architect.
This drawing to be read in conjunction with relevant consultant's drawings.
All dimensions are in millimetres and all levels are in meters to match Datum unless otherwise noted.

Contractor Design responsibility
It is noted that there are many elements within the works that require contractor design, and will be subject to certification as part of BCAR - see Preliminary Inspection Plan for clarity on certification required.

© This drawing or design may not be reproduced without permission.

Legend

- Type A - Stone Clad wall to TAA
- Type B - Rear Garden Wall
  2.0 meters high fair faced blockwork with precast concrete capping, painted
- Type B - 3.0m high
- Type C - Site Boundary Fence
- Type D - End Rear Wall / Side Wall Abutting Public Space
  As Type B above but rendered and painted towards the public area
- Type E - Walls between rear gardens
  2.0 meters high of proprietary precast concrete post and plank construction,
- Type F - 1.8m high painted metal solid bar railing
- Type G - As Type B above but with reinforced concrete hollow block, rendered and painted towards the public area

  *All mid-terrace houses shall have bin store fitted with opening doors for 3 no. wheelie bins, 600mm(W)x750mm(D)x1100mm(H). End terrace houses can provide hard standing to rear of property
- Existing Stone Wall Boundary
  The existing northern boundary wall shall be retained. Contractor to protect it as required. Works to the wall as follows:
  - clean and paint blockwork to to subject site side
  - existing stone capping which is inset in mortar shall be made good as required.

PG Pedestrian gate - Refer to Detail 8

CS Bicycle Stand - Refer to Detail 9

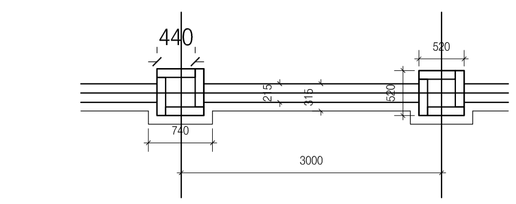

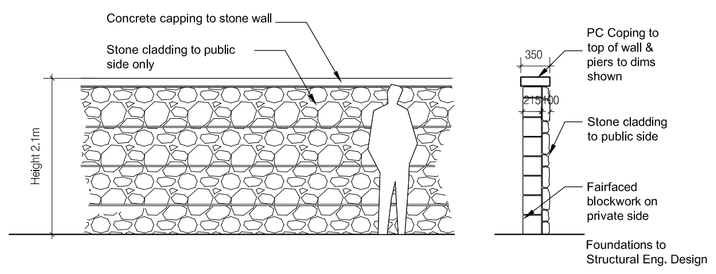

1 TYPE A - Stone Clad wall to TAA

Scale: 1:50

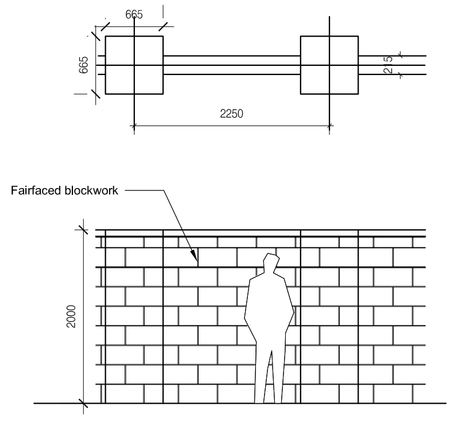

2 TYPE B - Rear Garden Wall

Scale: 1:50

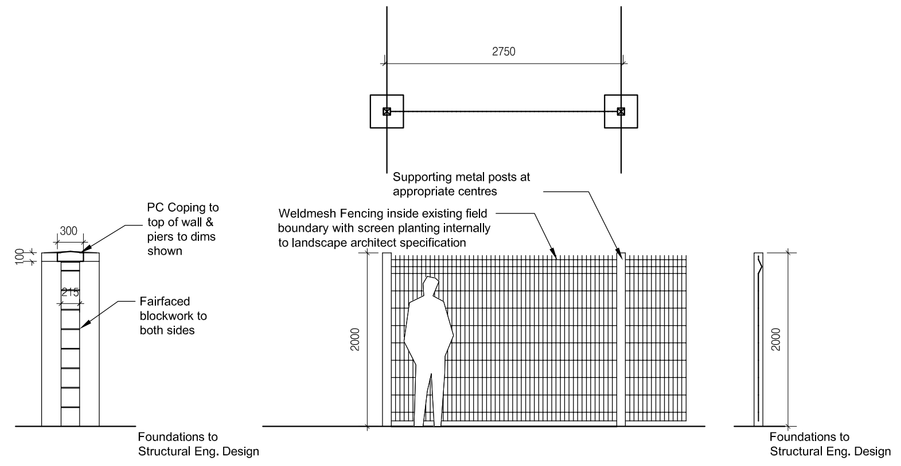

3 TYPE C - Site Boundary Fence

Scale: 1:50

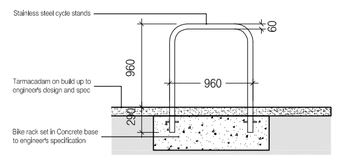

9 Typical Bicycle Stand

Scale: 1:50

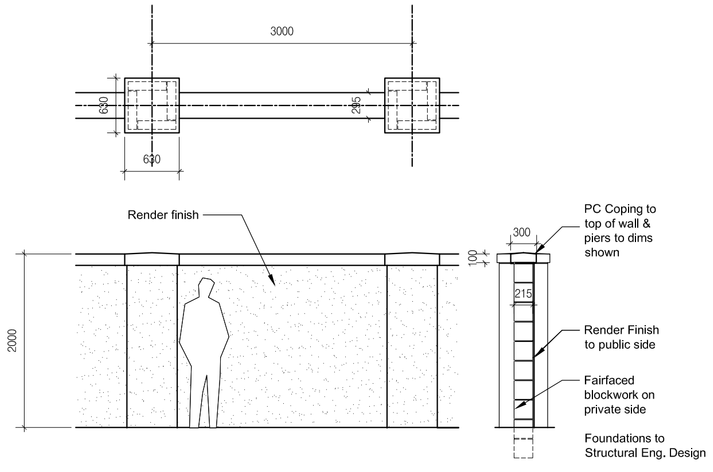

4 TYPE D - End Rear Wall / Side Wall Abutting Public Space

Scale: 1:50

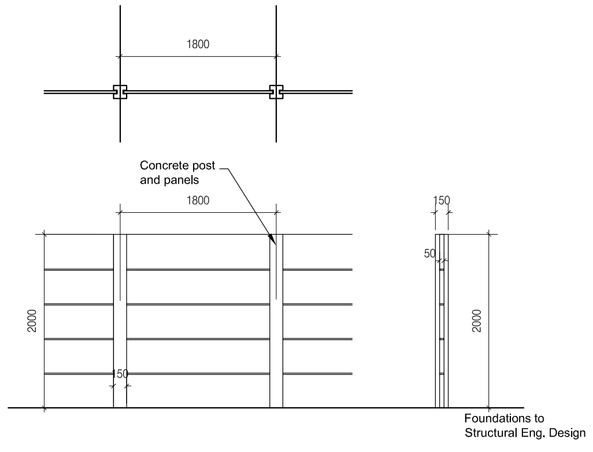

5 TYPE E - Walls between rear gardens

Scale: 1:50

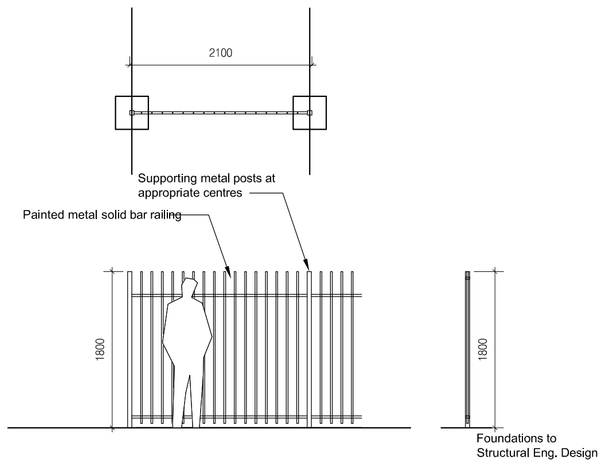

6 TYPE F - Painted metal dowel bar railing

Scale: 1:50

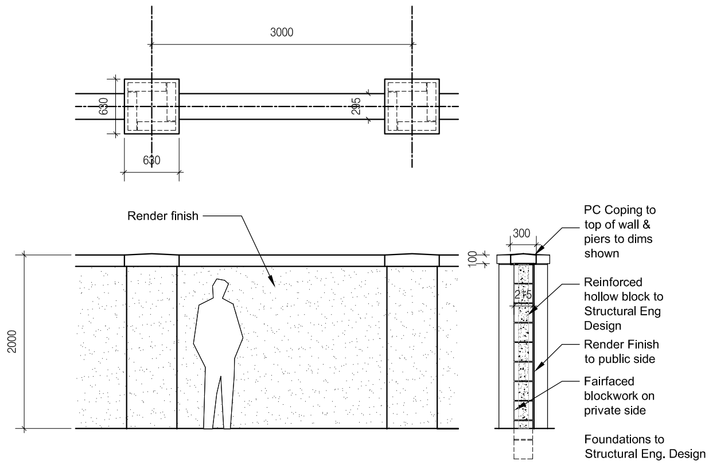

7 TYPE G - Reinforced Concrete Block Wall

Scale: 1:50

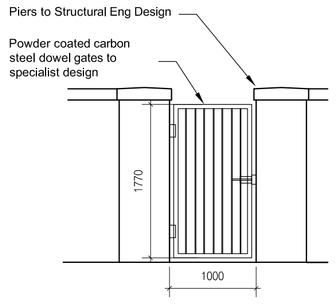

8 Typical Pedestrian Gate

Scale: 1:50

Revisions:

Rev	Description	Date	By
P-07	Issued For Planning	03/09/2021	JPH
P-06	Issued to GCC for Approval	13/08/2021	JPH
P-05	Stage 2A Issue	01/04/2021	JPH
P-04	DRAFT Planning Issue	03/03/2021	JPH
P-03	Type G added, F omitted	01/03/2021	JPH
P-02	Issued for Costing	22/02/2021	JPH
P-01	Issued to DT	09/02/2021	JPH

Project:
Keeraun Social Housing

Client:
Galway City Council

Title:
Boundary Treatment Details

Drawing / Document Name:
Project Number | Project | Originator | Volume | Level | Type | Role | Sheet Number
2633 KEE-COA-00-ZZ-DR-A-**0516**

Suitability Status : Code - Description
S4 For Stage Approval

Revision:
P-07

Scale @ A1	Drawn:	Checked:	Date:
Varies	James Hanlon	William Gleeson	09-02-2021

COADY ARCHITECTS
Mt Pleasant Business Ctr., Ranelagh, Dublin 6 D06X7P8
8a Oranpoint, Main St, Oranmore, Co. Galway, H91 T026